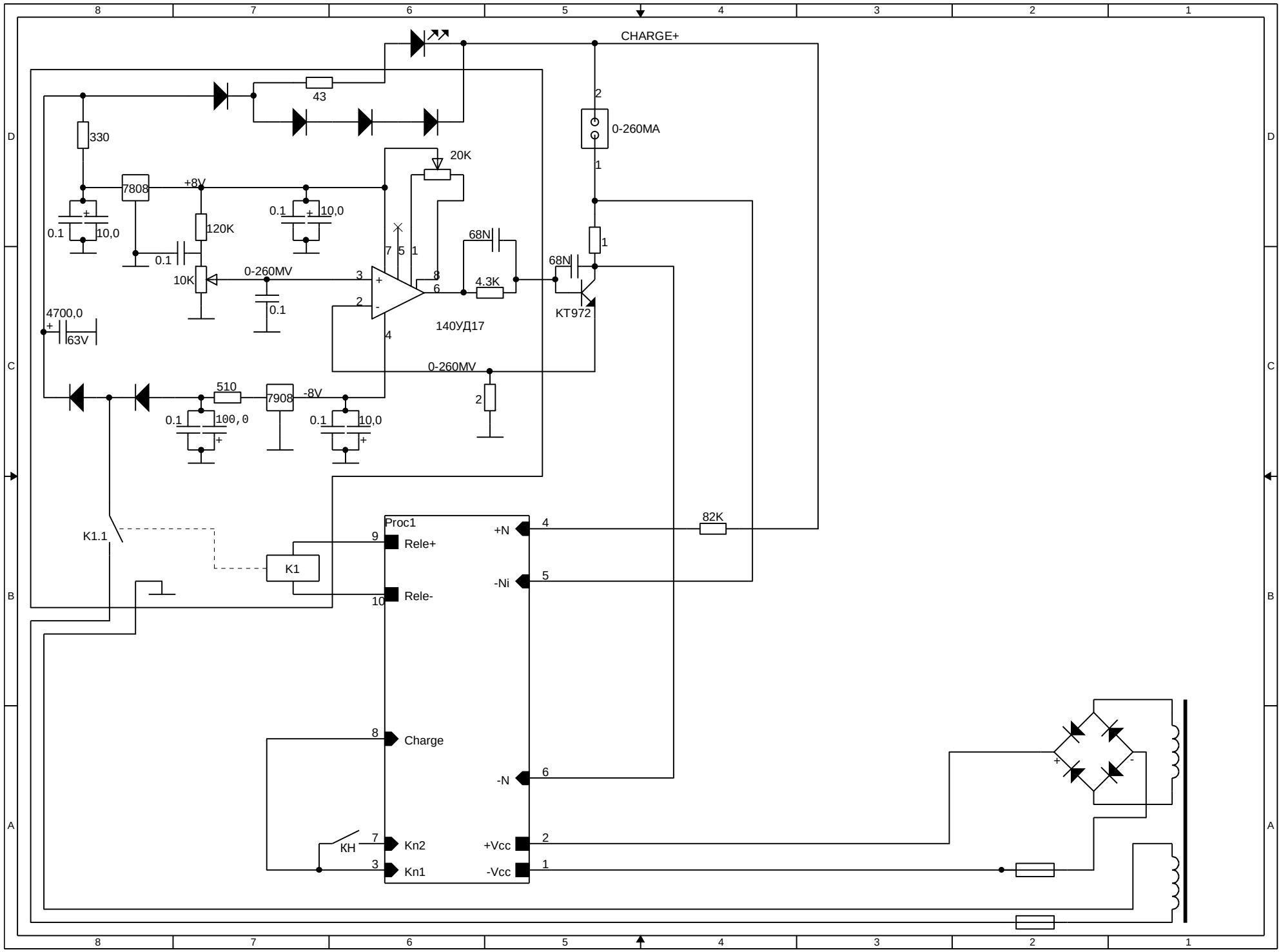
CHARGE+
43
330
7808
+8V
0.1
10,0
120K
0.1
10K
0-260MV
0.1
4700,0
63V
20K
7
5
1
3
2
8
6
4
140УД17
68N
4.3K
68N
KT972
0-260MV
510
7908
-8V
0.1
100,0
0.1
10,0
2
0-260MA
2
1
1
K1.1
K1
Proc1
9
Rele+
10
Rele-
8
Charge
7
Kn2
3
Kn1
KH
+N
4
-Ni
5
-N
6
+Vcc
2
-Vcc
1
82K
+
-